Origins Rain Shower
Komplett-Unterputz-Dusche

technical drawing:

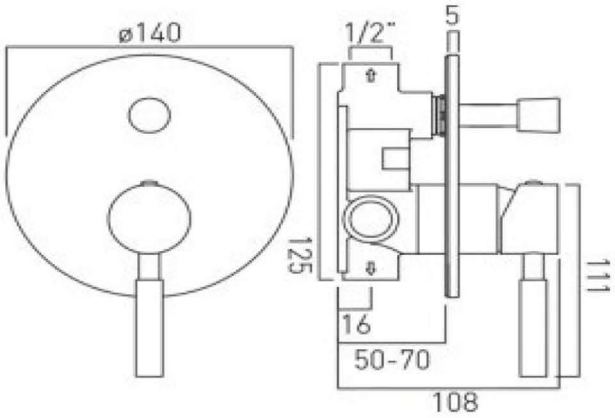

description: concealed shower valve with diverter
single lever
wall mounted
ceramic cartridge CAR-K35A
2 x 1/2" inlets
1 x 1/2" outlet
1 x 3/4" outlet (3/4"-1/2" adapter supplied)
min-max wall mount 70-95mm
optimum installation depth 83mm

finishes: chrome

guarantee: 12 year guarantee

minimum operating pressure: 0.2 bar LP shower 1.5 bar MP bath

certificates and awards:

WRAS APPROVED PRODUCT

cert no. 1603027

bädermax
Mein Luxusbad

Origins Rain Shower

Komplett-Unterputz-Dusche

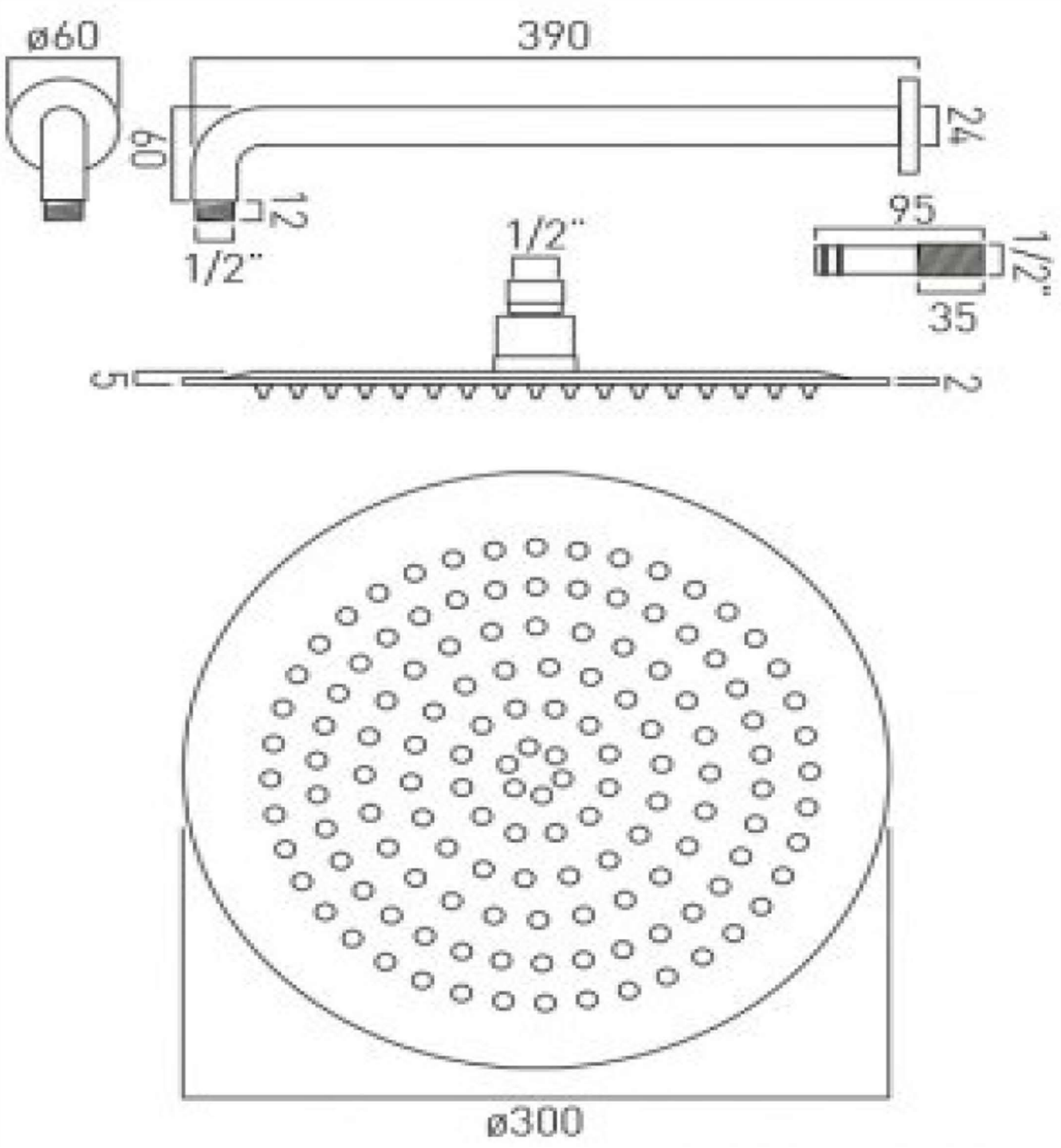

bädermax
Mein Luxusbad

Origins Rain Shower
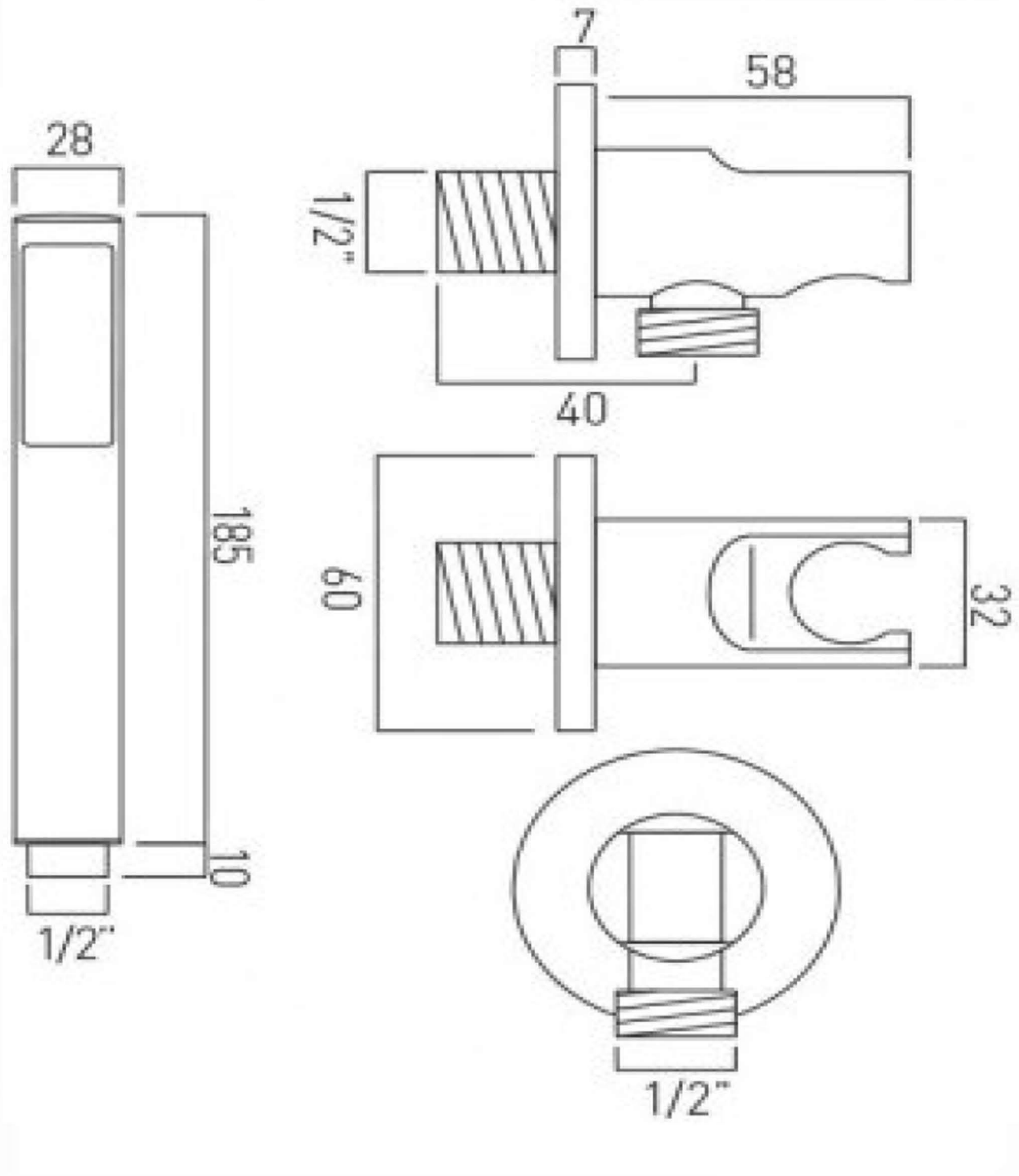
Komplett-Unterputz-Dusche